SRIM - Ball check valve DN 15:50

Ball check valve with ends for socket welding, metric series.

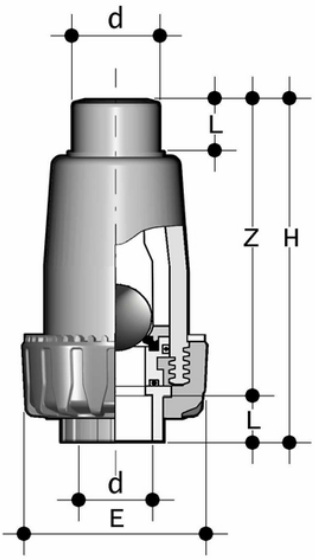

Reference	d	DN	PN	E	H	L	Z	g
SRIM020F	20	15	10	55	105	16	89	75
SRIM025F	25	20	10	66	126	19	107	140
SRIM032F	32	25	10	74	148	22	126	215
SRIM040F	40	32	10	86	172	26	146	320
SRIM050F	50	40	10	99	189	31	158	440
SRIM063F	63	50	10	120	224	38	186	750

SRIM - Ball check valve DN 15:50

- Connection system for weld joints
- PN10 **valve body made for PP-H injection moulding** and European Directive 2014/68/EU (PED) compliant for pressurised equipment. ISO 9393 compliant test requirements
- The valve can only be used with fluids with specific weight under 1,20 g/cm3
- **Sealing system with antiblow out design**
- Ball entirely in talc-filled PP
- Can be maintained with the valve body installed
- Can be **installed** in either a **vertical** (preferable) or **horizontal position**