RVOM - Sediment strainer DN 15:100

Sediment strainer with steel core backing ring , PP/FRP coated, drilled EN/ISO/DIN PN10/16.

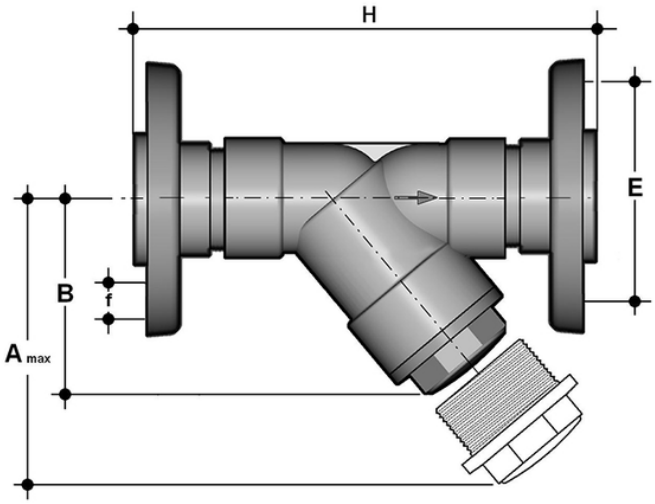

EPDM

Reference	d	DN	PN	A max	B	F	f	H	g
RVOM075E	75	65	6	300	176	145	18	356	5120
RVOM090E	90	80	4	325	192	160	18	404	6020
RVOM110E	110	100	4	385	231	180	18	475	7965

FKM

Reference	d	DN	PN	A max	B	F	f	H	g
RVOM075F	75	65	6	300	176	145	18	356	5120
RVOM090F	90	80	4	325	192	160	18	404	6020
RVOM110F	110	100	4	385	231	180	18	475	7925

RVOM - Sediment strainer DN 15:100

- Connection system for weld, threaded and flanged joints
- **Strainer** assembled on an **easily removed support** that facilitates cleaning or replacement
- **Valve material compatibility** (PP-H) with water conveyance, drinking water and other food substances according to **current regulations**
- Can be maintained with the valve body installed